WHS1644-SK

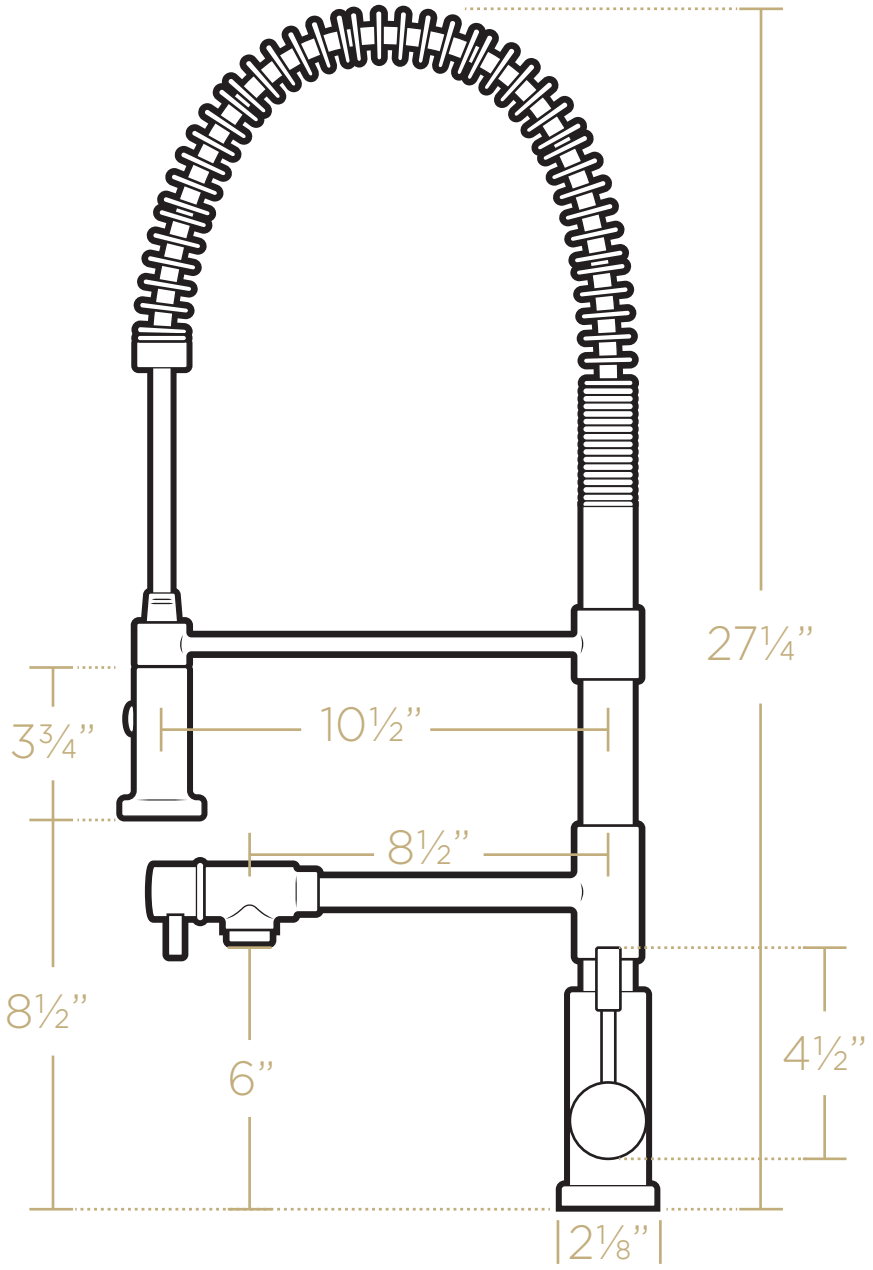

12 lbs.

P.O. Box 26064, West Haven, CT USA 06516 • [Toll Free Phone]: 800.527.6690
info@whitehauscollection.com • whitehauscollection.com